Maschinelles Sehen

Controlling Image generation

Master Medieninformatik / Technische Informatik
Prof. Dr. Kristian Hildebrand
khildebrand@bht-berlin.de

Review - Generative Models

Disadvantages GANs:

- Mode Collapse
- Non-convergence
- Diminished/Vanishing Gradients (see blogpost)
- "[...] GANs are able to trade off diversity for fidelity, producing high-quality samples but not covering the whole distribution." (see paper)
- "constraints make it challenging to scale and use them in new contexts" (see other blogpost)
- Difficult to work with/train

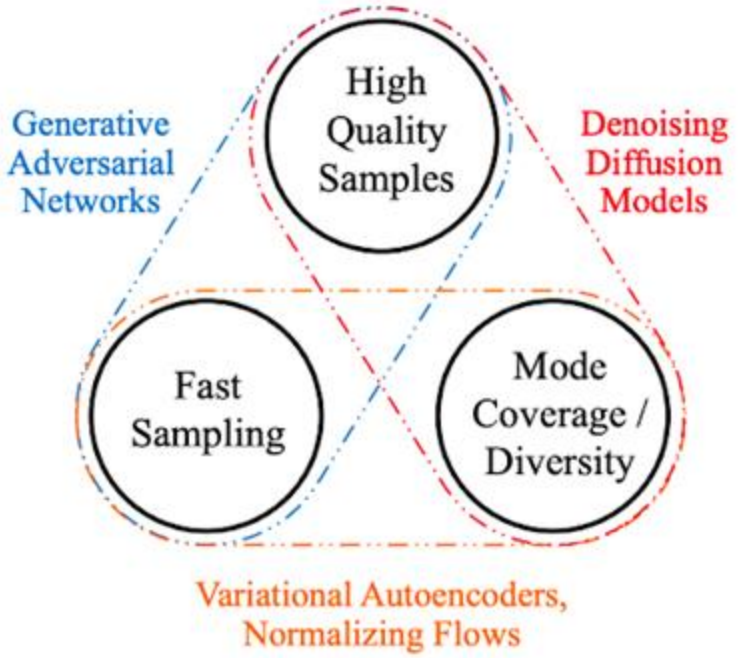

Taken from Nvidia's Blogpost

Diffusion Models:

- training stability, distribution coverage, easy scalability
- even better realistic images (see paper)

Stable Diffusion as Baseline

Stable Diffusion

- High-Resolution Image Synthesis with Latent Diffusion Models
- not “CLIP-Guided”: a version of CLIP is “Frozen” and embedded into the generation algorithm itself

Advantages over other models (like DALL-E):

- open-source (code and model weights)
- relatively low resource/memory requirement
- doesn’t require as much hardware
- can run on consumer GPUs
- more efficient
- image quality and speed on par

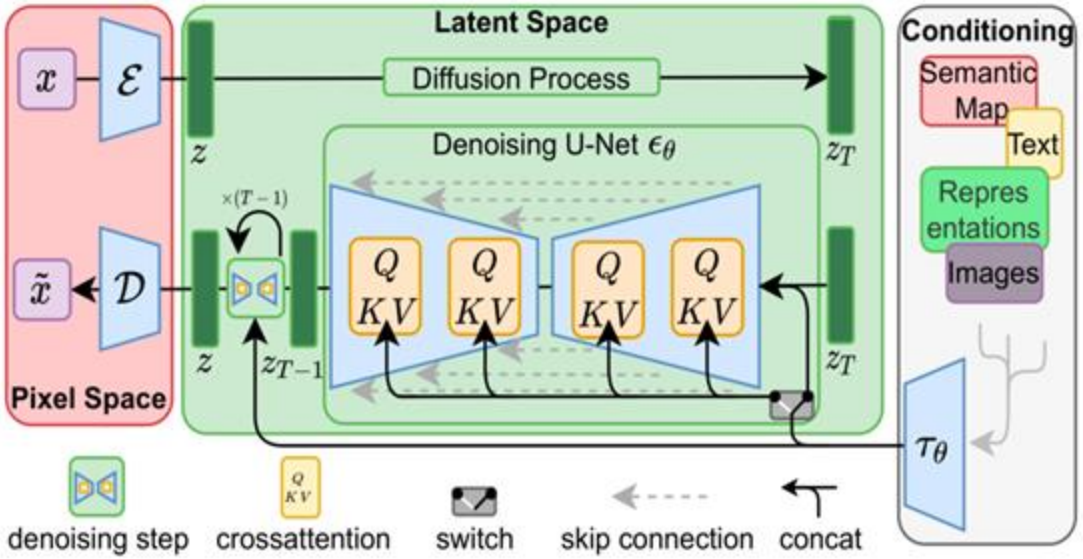

What is the CLIP *Contrastive Language–Image Pre-training* model

https://openai.com/research/clip

- **CLIP** model consists of **text and image encoder** which encodes textual and visual information into a **multimodal embedding space**
- Aim of the model is to **increase the cosine similarity score of images and text pairs (contrastive learning)**

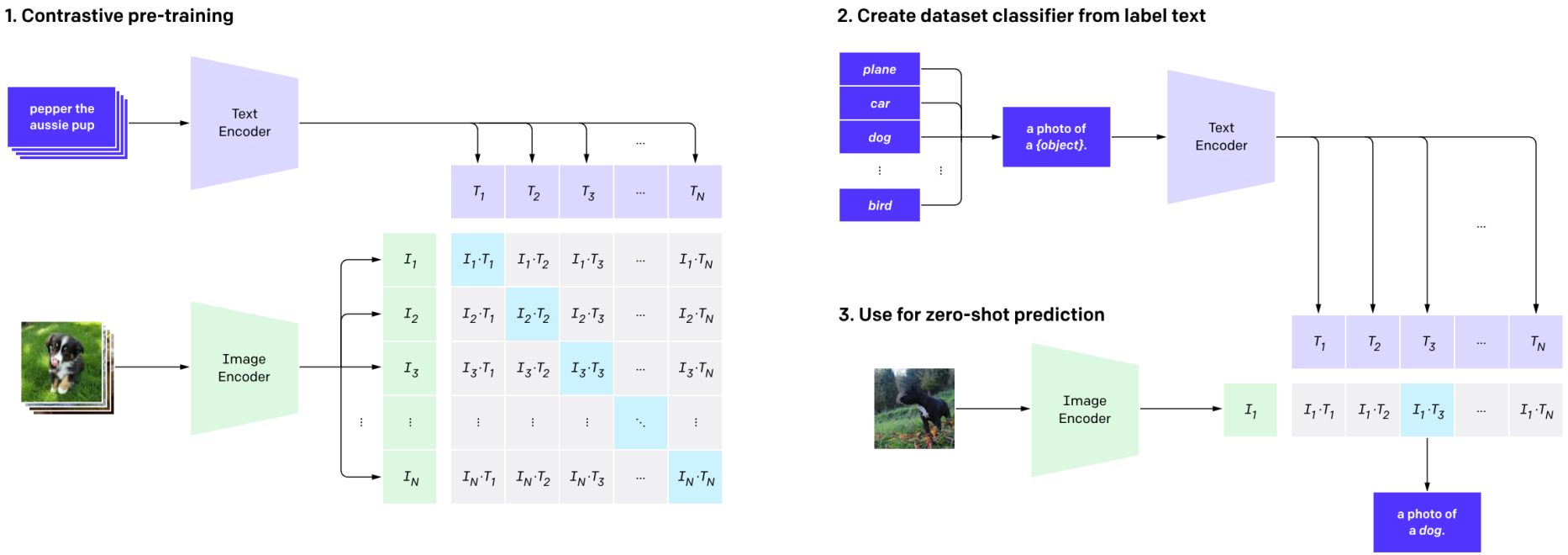

What is the CLIP Score

https://openai.com/research/clip

- CLIP-Score is a metric for evaluating the relevance of generated text to a given image

1. **Encode Image and Text:**
   - Image and generated text are separately encoded using the CLIP model
   - This gives two feature vectors: one for the image and one for the text.

2. **Calculate Similarity:** similarity between two vectors is computed using the cosine similarity

CLIP similarity ranking of stylised meshes against the text prompt "Meadows"

Style-aware Augmented Virtuality Embeddings (SAVE).
Johannes Hoster, Dennis Ritter, Kristian Hildebrand.
IEEE Conference on Virtual Reality and 3D User Interfaces. 2023

Overview of this lecture

„Although they [Latent diffusion models] achieve promising synthesis quality, **the text prompt cannot provide the synthesis results with reliable structural guidance**.“ – T2I-Adapter paper

How to control the generation process to achieve desired results?

Models:

- Stable Diffusion 2.0 Depth2Img
- ControlNet
- T2I Adapter

Stable Diffusion 2.0

- SD 2.0 deployed a **shape-preserving, depth-guided** stable diffusion model, called **depth2img**

- It infers the depth of an input image (using an existing model) and then generates new images using both the text and depth information.

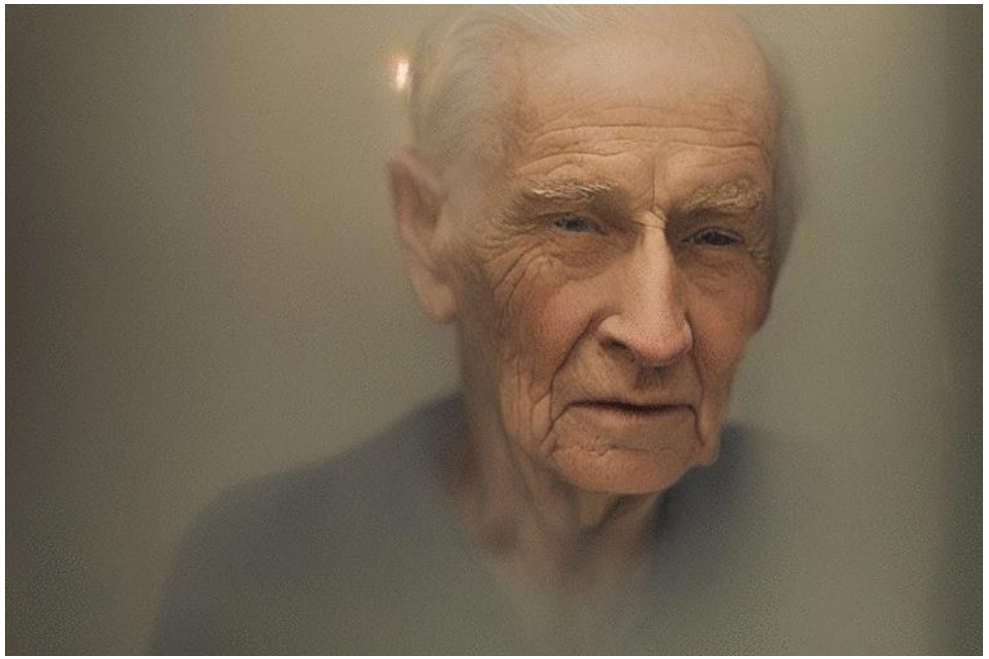

Depth2Img

From La La Land to wrestling match

Prompt: „photo of two men wrestling“

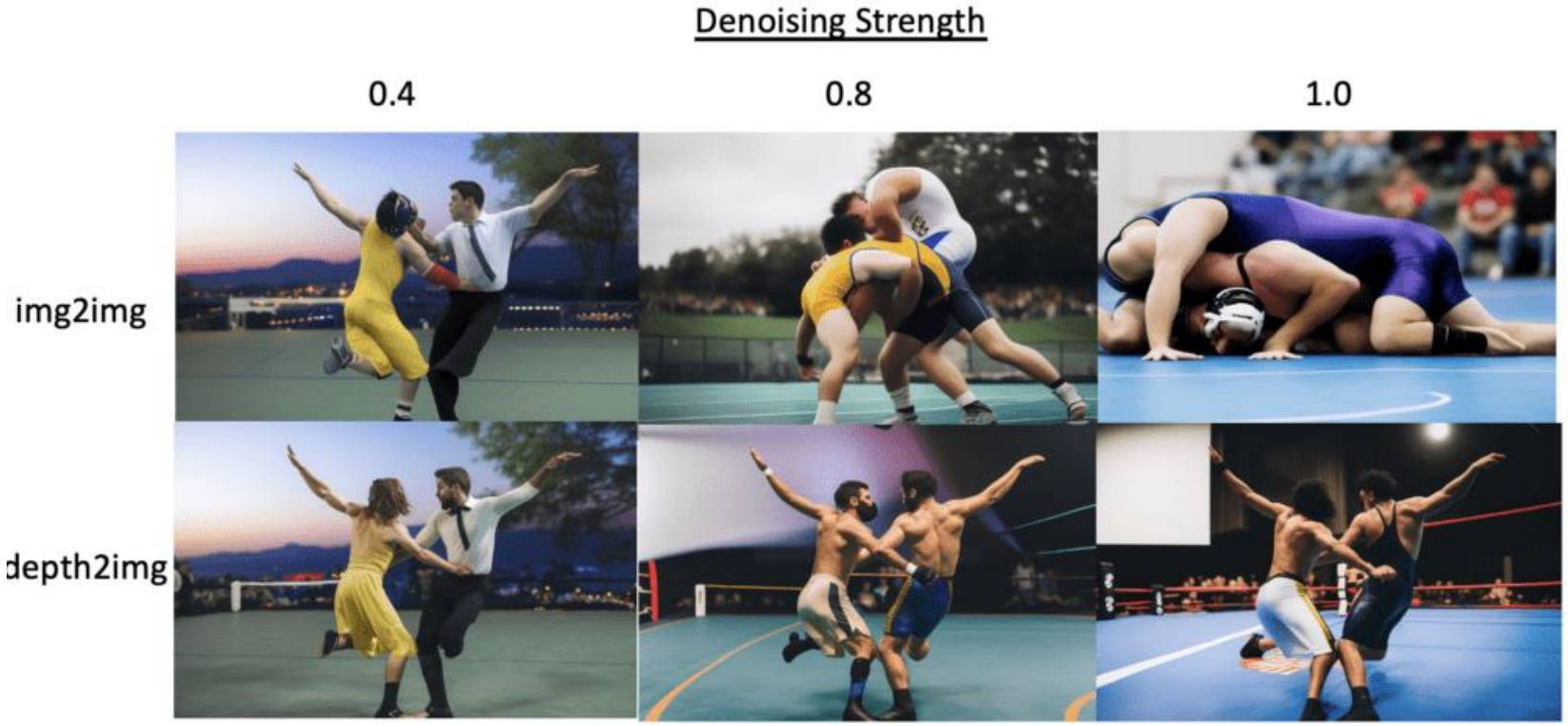

Control Net

„a neural network architecture to add spatial conditioning controls to large, pretrained text-to-image diffusion models.”

Control Net

- Adds extra conditions
- Weights of SD are copied in „locked“ and „trainable“ copy
- “Zero convolution” is a 1x1 convolution with both weight and bias initialized as zeros
- Before training they output zeros and don’t impact SD
- This fine-tuning approach (similar to hyper network) allows training on small-scale devices and small datasets
- New condition? Train new model.

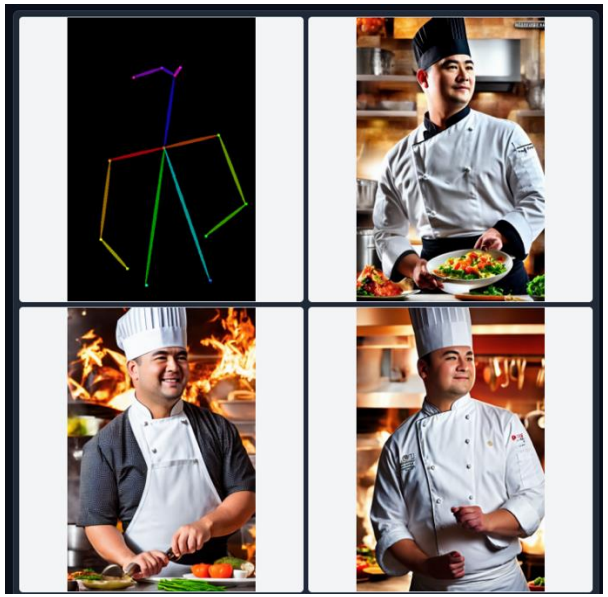

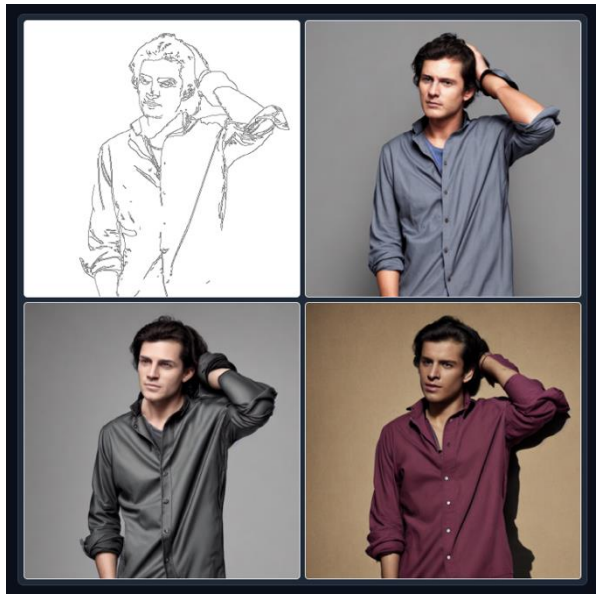

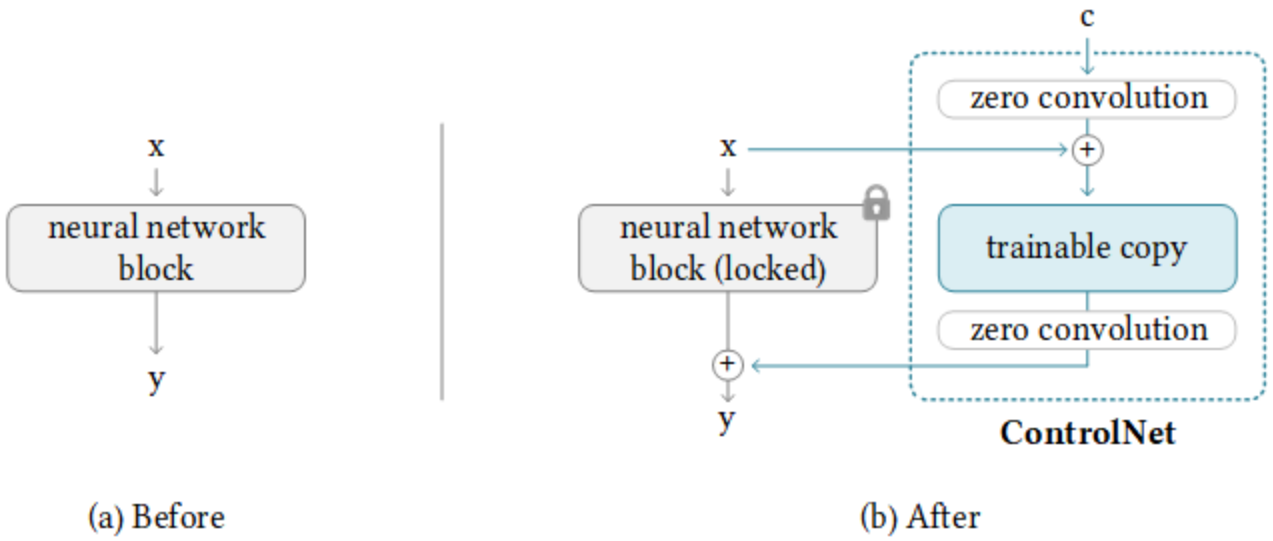

„Zero convolution“

Q: If the weight of a conv layer is zero, the gradient will also be zero, and the network will not learn anything. Why "zero convolution" works?

A: This is wrong. Let us consider a very simple

$$y = wx + b$$

and we have

$$\partial y / \partial w = x, \partial y / \partial x = w, \partial y / \partial b = 1$$

and if $w = 0$ and $x \neq 0$, then

$$\partial y / \partial w \neq 0, \partial y / \partial x = 0, \partial y / \partial b \neq 0$$

which means as long as $x \neq 0$, one gradient descent iteration will make w non-zero. Then

$$\partial y / \partial x \neq 0$$

so that the zero convolutions will progressively become a common conv layer with non-zero weights.

Control Net

- ControlNet reuses the SD encoder as backbone to learn controls

- Performant: Required GPU memory is not much larger than origina SD

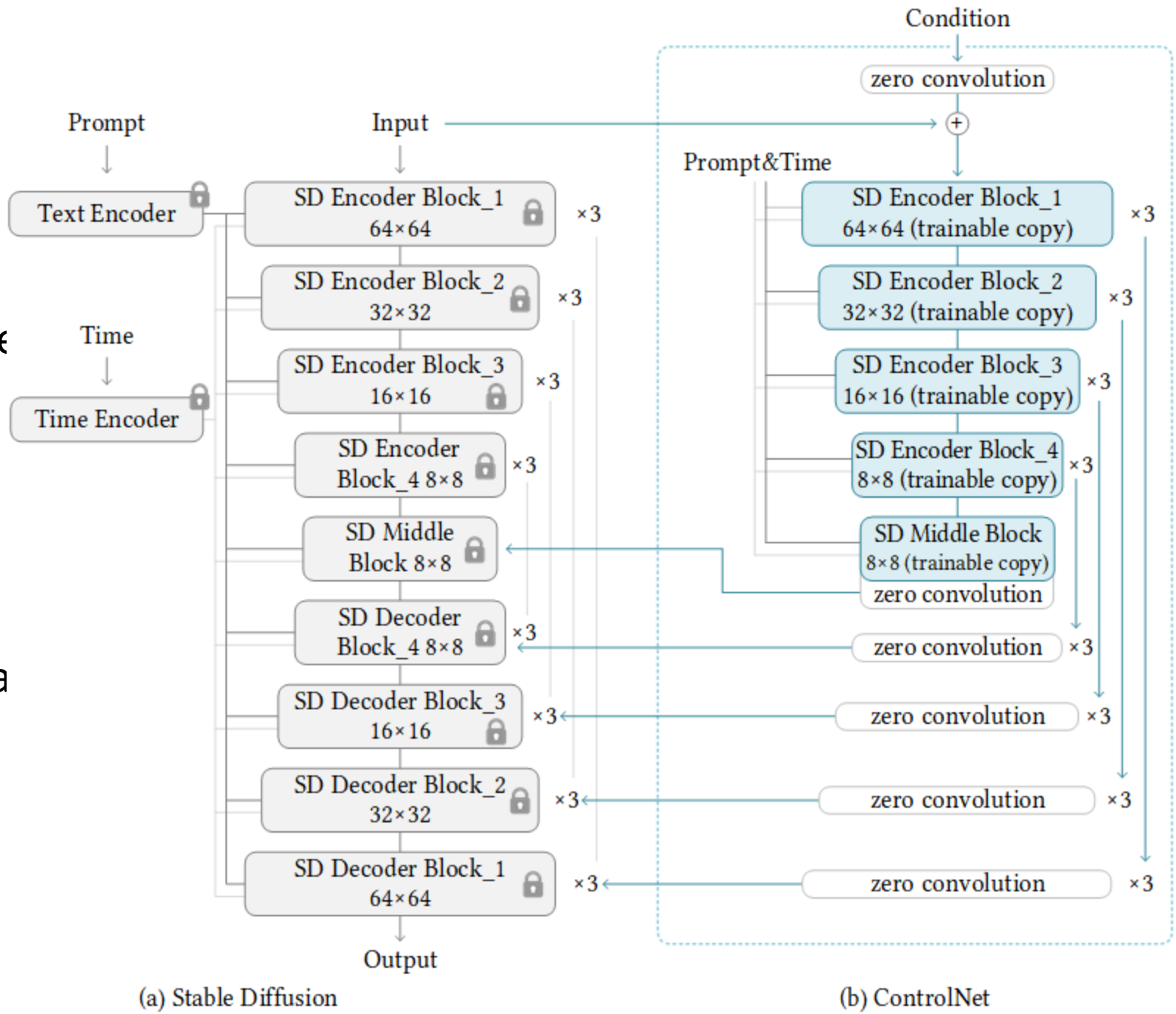

Control Net

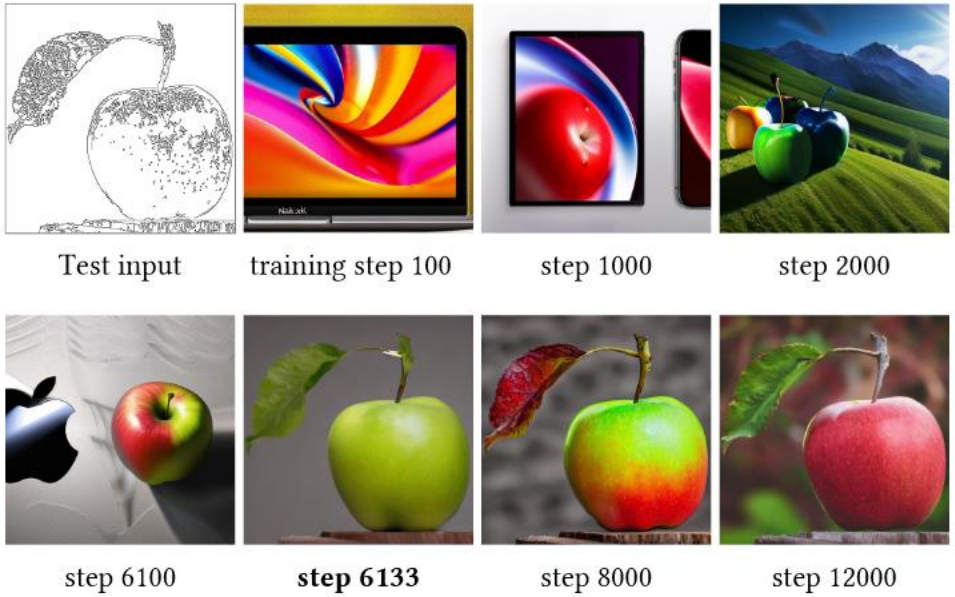

Figure 4: The sudden convergence phenomenon. Due to the zero convolutions, ControlNet always predicts high-quality images during the entire training. At a certain step in the training process (*e.g.*, the 6133 steps marked in bold), the model suddenly learns to follow the input condition.

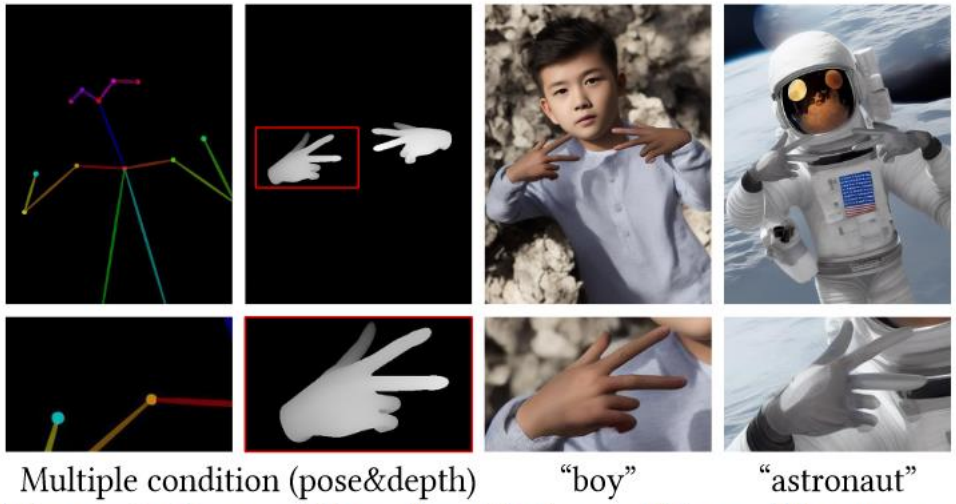

Figure 6: Composition of multiple conditions. We present the application to use depth and pose simultaneously.

Control Net Conditions

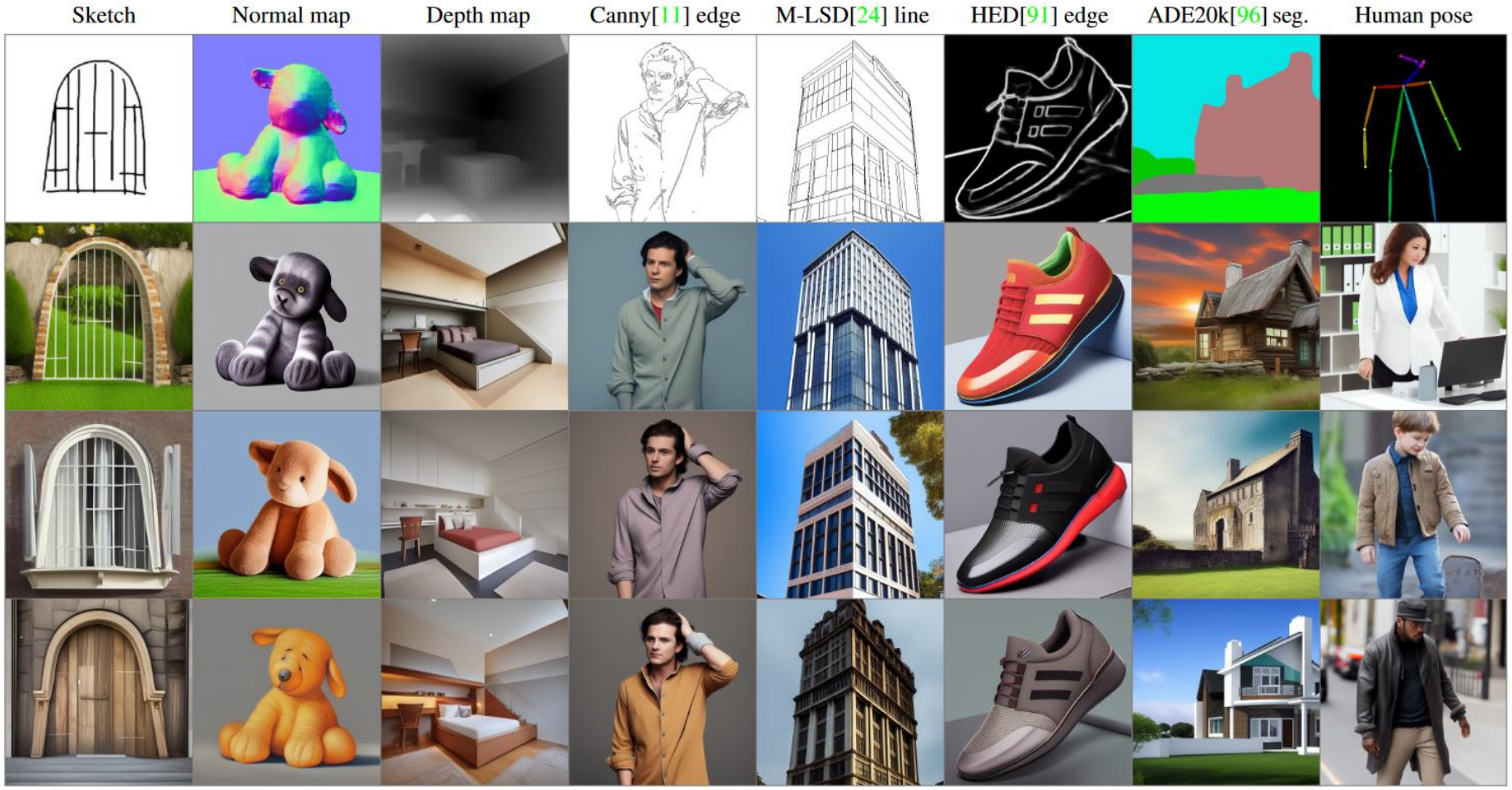

Figure 7: Controlling Stable Diffusion with various conditions **without prompts**. The top row is input conditions, while all other rows are outputs. We use the empty string as input prompts. All models are trained with general-domain data. The model has to recognize semantic contents in the input condition images to generate images.

Control Net Comparison

- SD2.1 **should** be better than SD1.5
- Depth clarity of Control Net is better even with older SD version
- Especially for backgrounds or in this picture the jaw

ControlNet+SD1.5 | SD2.1 Depth model

T2I Adapter

„align internal knowledge in T2I models with external control signals“

T2I Adapter

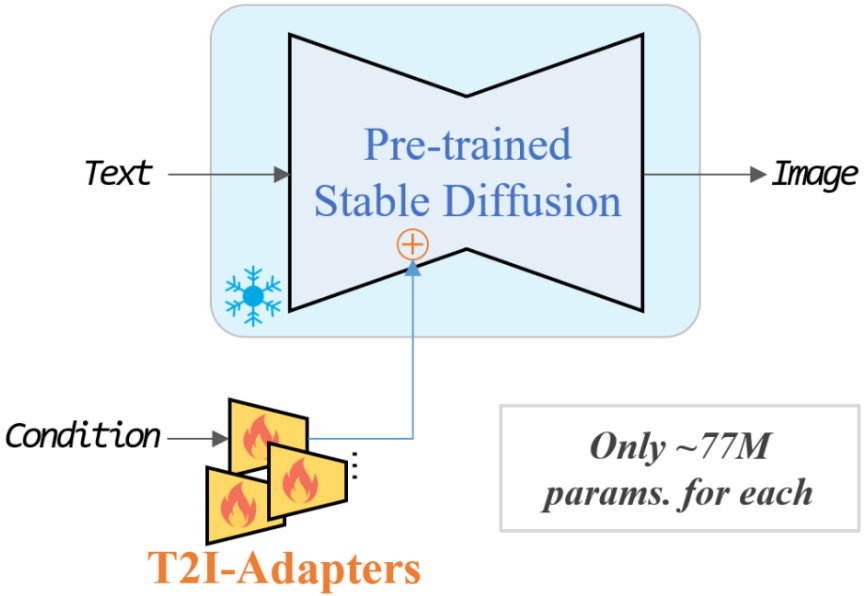

- ✓ ***Plug-and-play.*** *Not affect original network topology and generation ability*
- ✓ ***Simple and small.*** *~77M parameters and ~300M storage*
- ✓ ***Flexible.*** *Various adapters for different control conditions*
- ✓ ***Composable.*** *More than one adapter can be easily composed to achieve multi-condition control*
- ✓ ***Generalizable.*** *Can be directly used on customed models*

Chong Mou et al. T2I-Adapter: Learning Adapters to Dig out More Controllable Ability for Text-to-Image Diffusion Models. 2023. arXiv: 2302.08453 [cs.CV].

T2I Adapter

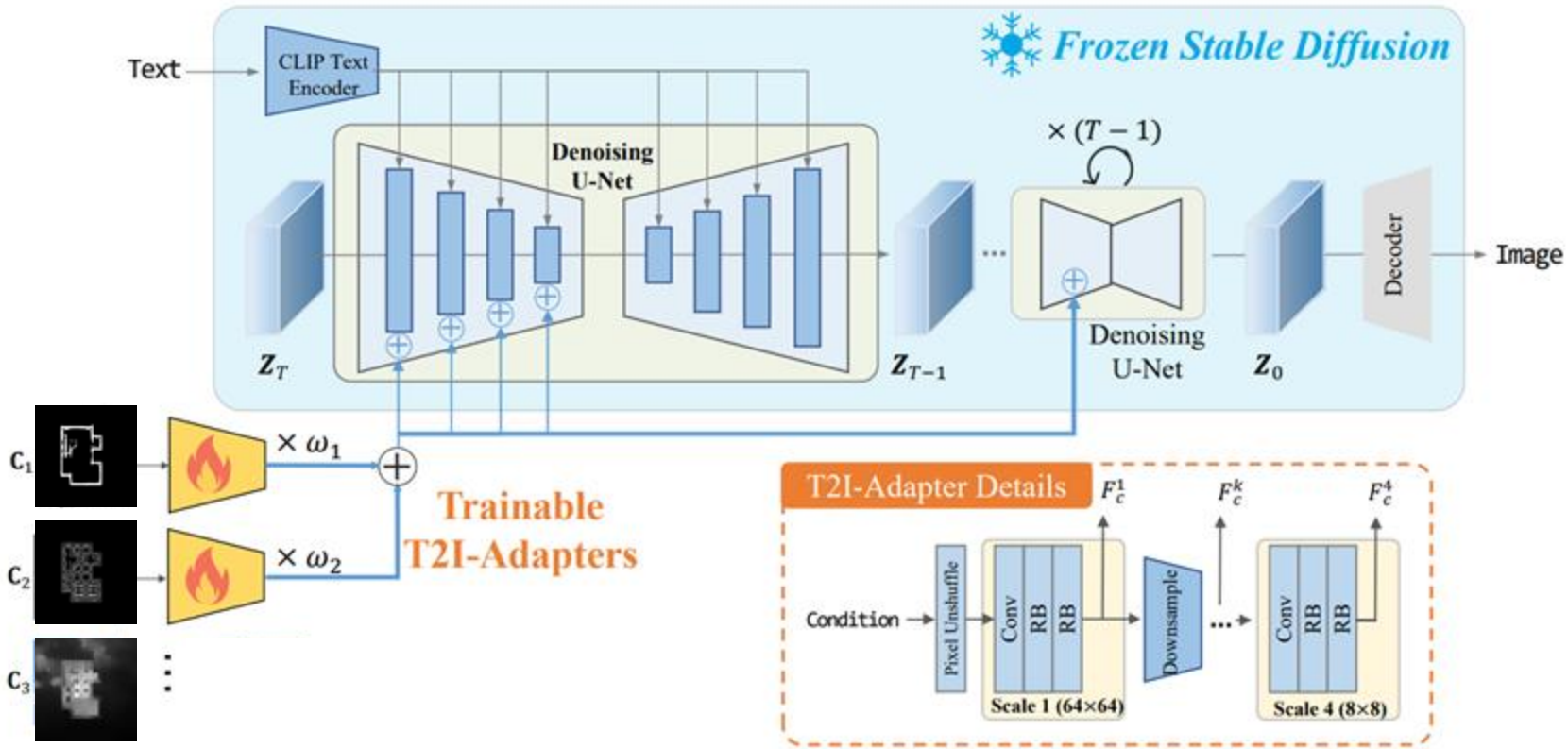

Chong Mou et al. T2I-Adapter: Learning Adapters to Dig out More Controllable Ability for Text-to-Image Diffusion Models. 2023. arXiv: 2302.08453 [cs.CV].

Multimodally-guided Satellite Imagery Synthesis

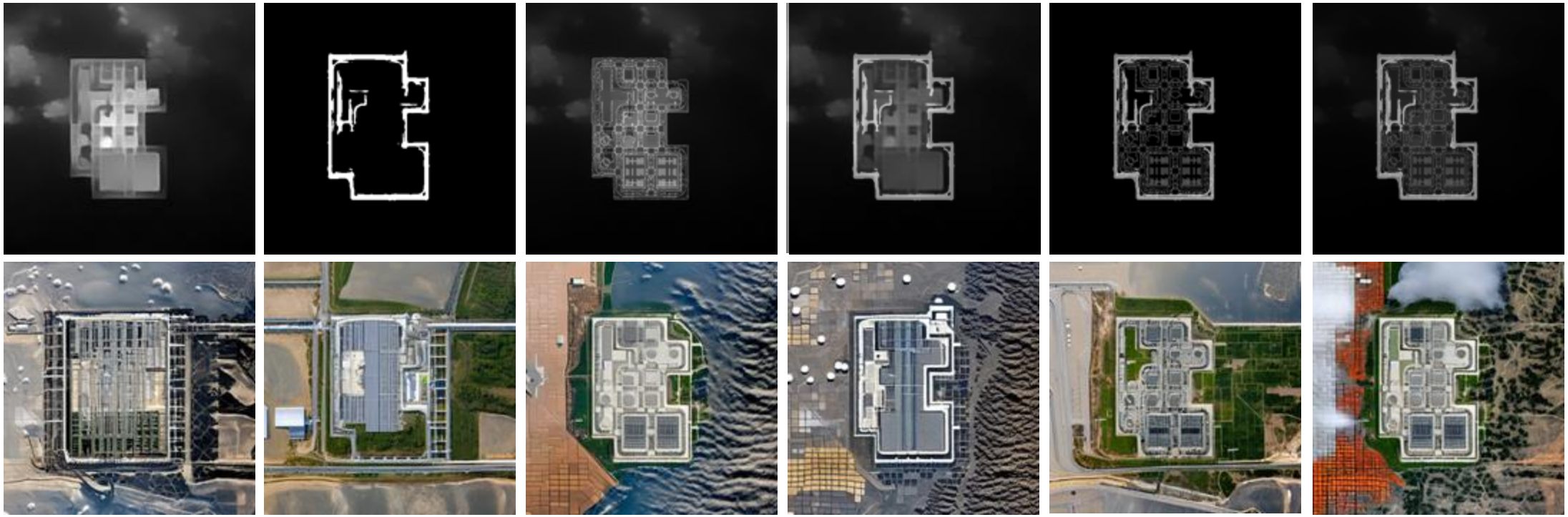

•Depth •Sketch •Canny + Depth •Depth + Sketch •Canny + Sketch •All three content guiding modalities

T2I CoAdapter

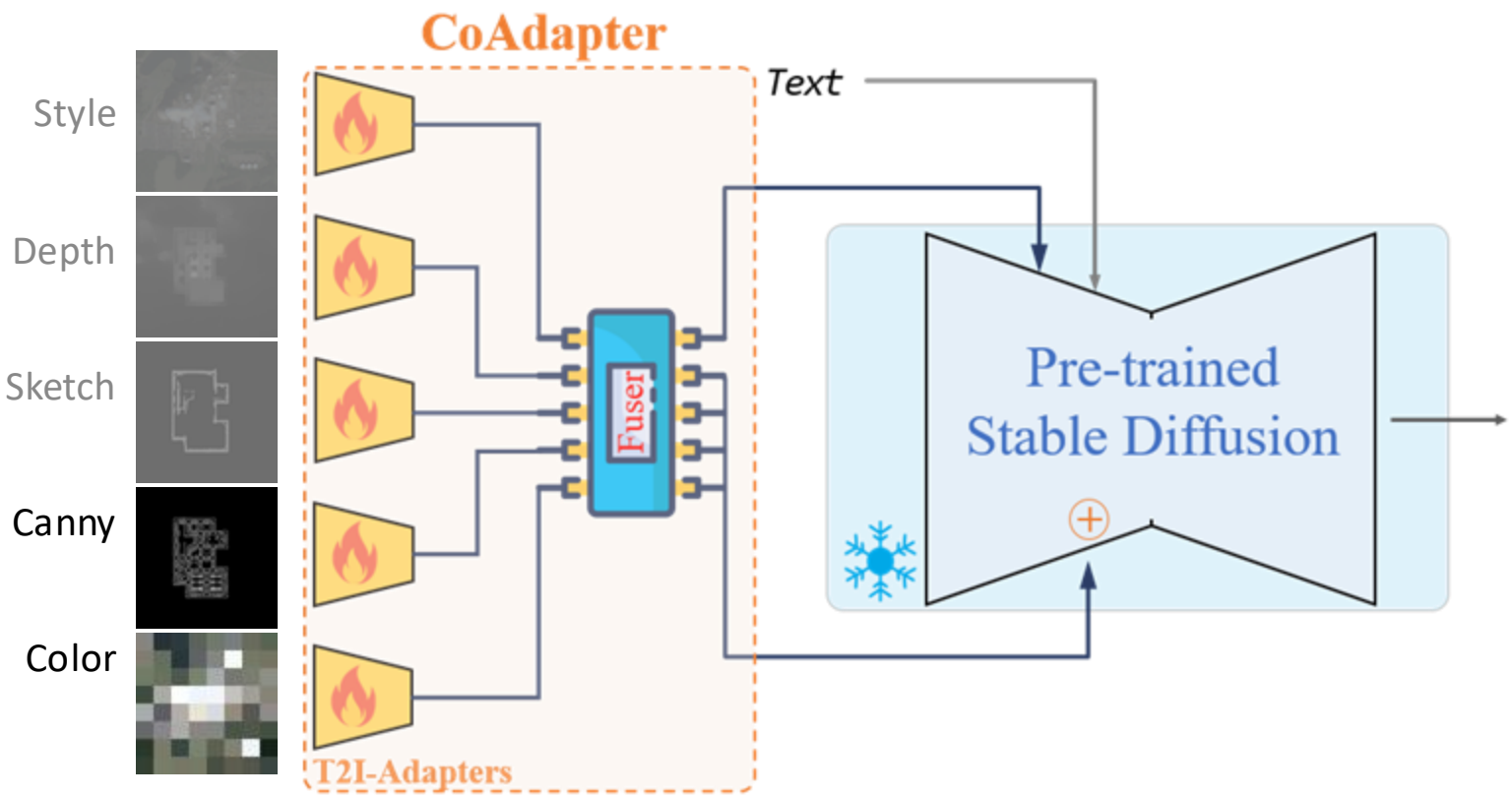

Refrence image from game engine

Chong Mou et al. T2I-Adapter: Learning Adapters to Dig out More Controllable Ability for Text-to-Image Diffusion Models. 2023. arXiv: 2302.08453 [cs.CV].

ControlNet vs T2I Adapter

Prompt:

„photo of two men wrestling“

MIDaS Depth map

Result

ControlNet v1.1

T2I Adapter